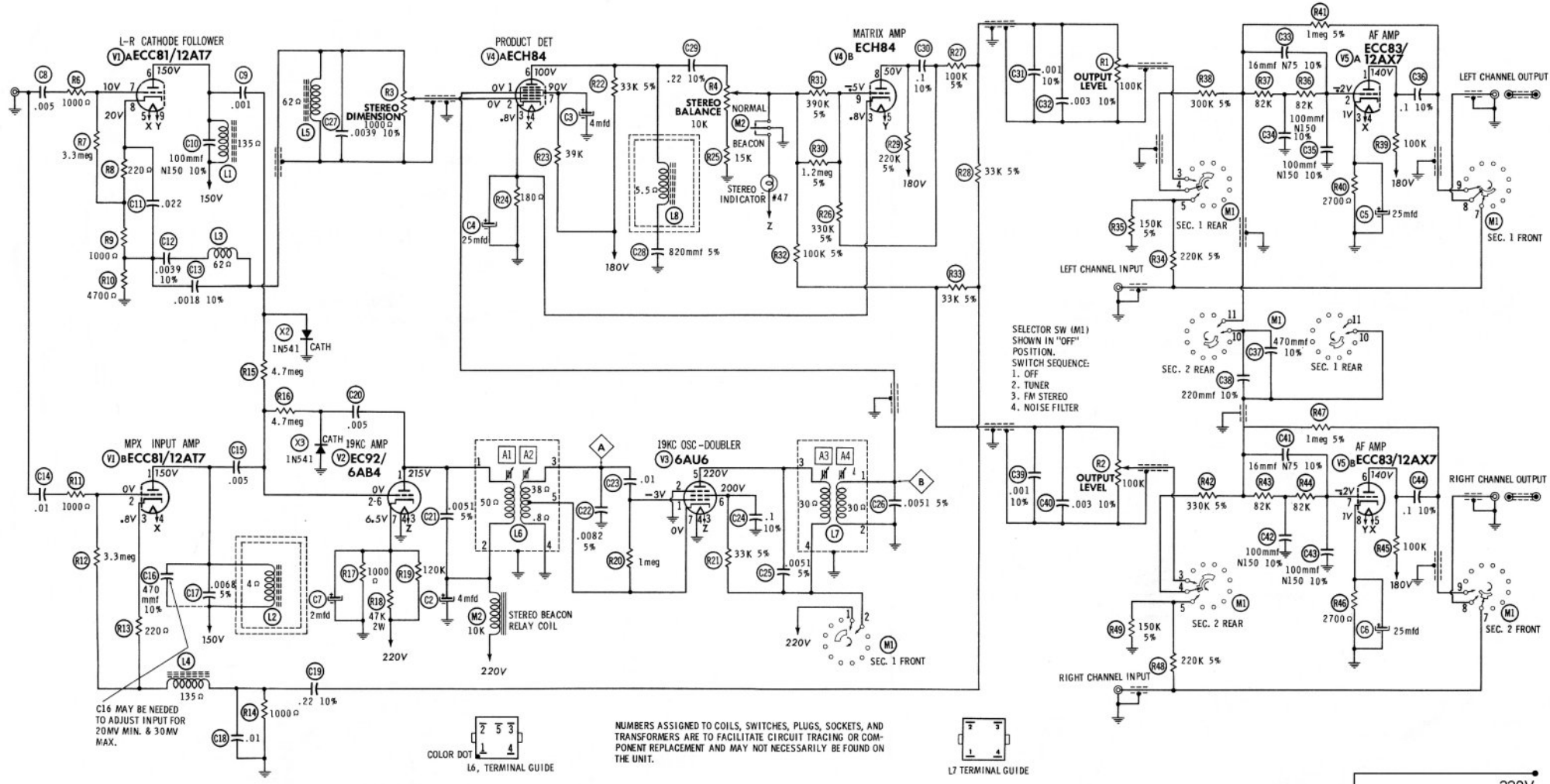

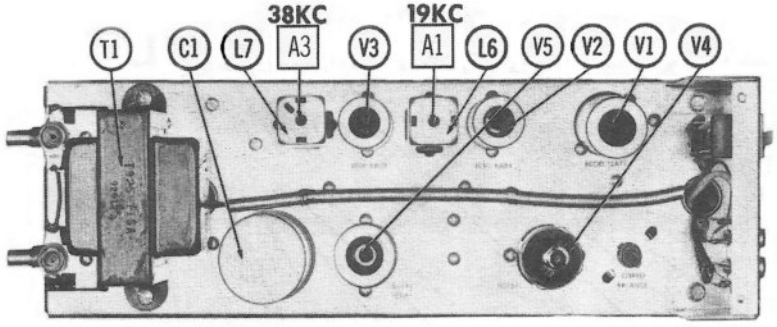

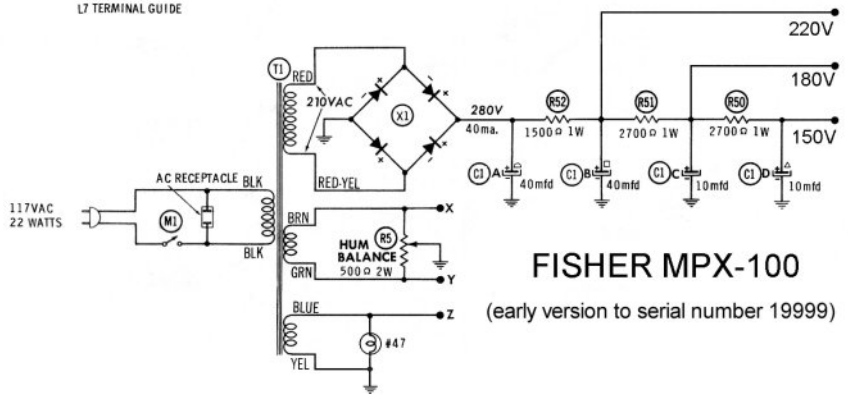

FISHER MPX-100

(early version to serial number 19999)